REVISIONS							
ZONE	LTR	DESCRIPTION	CHANGE No	DATE	BY	APPR'D
	A	RELEASED FOR PRODUCTION	DR021150	19MAY05	TJD	
	B	B1 ADDED LABEL CHART	DR-8221	02JUN06	TJD	
	C	C1 TU174 WAS FM0001346 C2 UPDATED TITLEBLOCK	73169	28OCT10	SLK	CFH

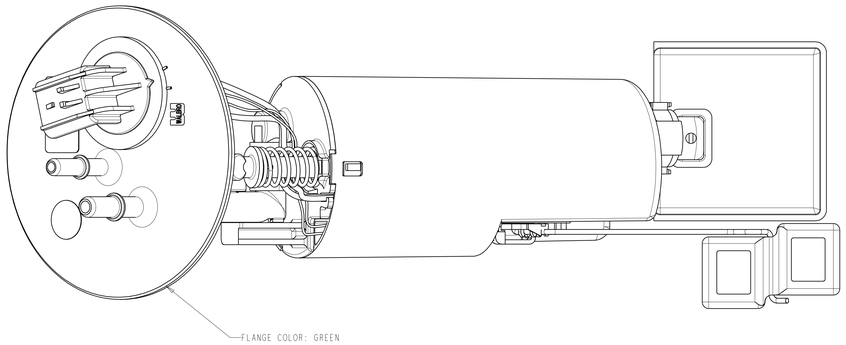

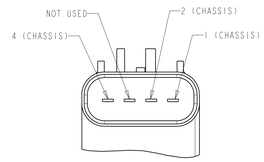

VIEW IN DIRECTION
OF ARROW Z

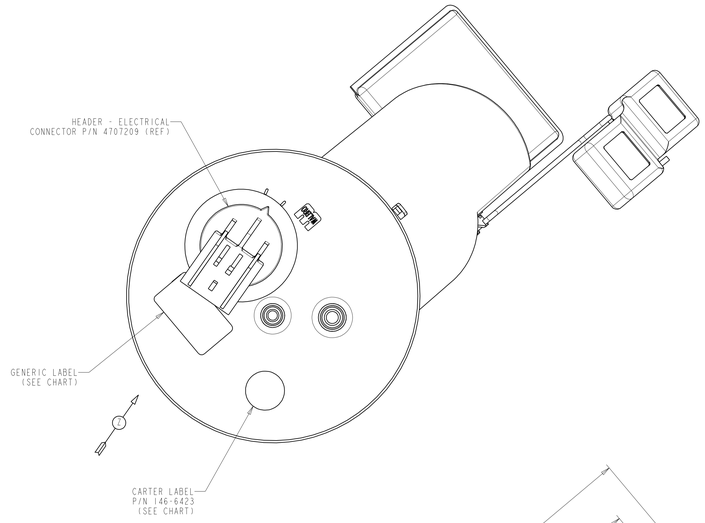

INTANK CONNECTOR WIRING			
LOCATION	FUNCTION	COLOR	WIRE GAUGE MINIMUM
1	PUMP B+	RED	14
2	SENSOR SIGNAL		20
3	SENSOR GROUND		20
4	PUMP GROUND	BLACK	14

(7)(8) MODULE MODEL#	GENERIC LABEL PRINT TEXT PER BOM	CARTER I.D. LABEL
TU174	YES	NO
TU174-21	YES	YES
TU174-58	YES	NO

LEVEL UNIT RESISTANCE VS. FLOAT HEIGHT				
POINT	HEIGHT (MM) BASIC	GAUGE RESISTANCES OHMS		
		NOMINAL	UPPER LIMIT	LOWER LIMIT
FS	142.2±4.0	70	90	50
FD	133.4	130	145	115
3/4	97.2	340	370	310
1/2	66.1	550	580	520
1/4	34.8	760	790	730
ED	6.2	970	1000	940
ES	0.5 ±4.0	1050	1080	1020

*AS MEASURED FROM BASE OF MODULE

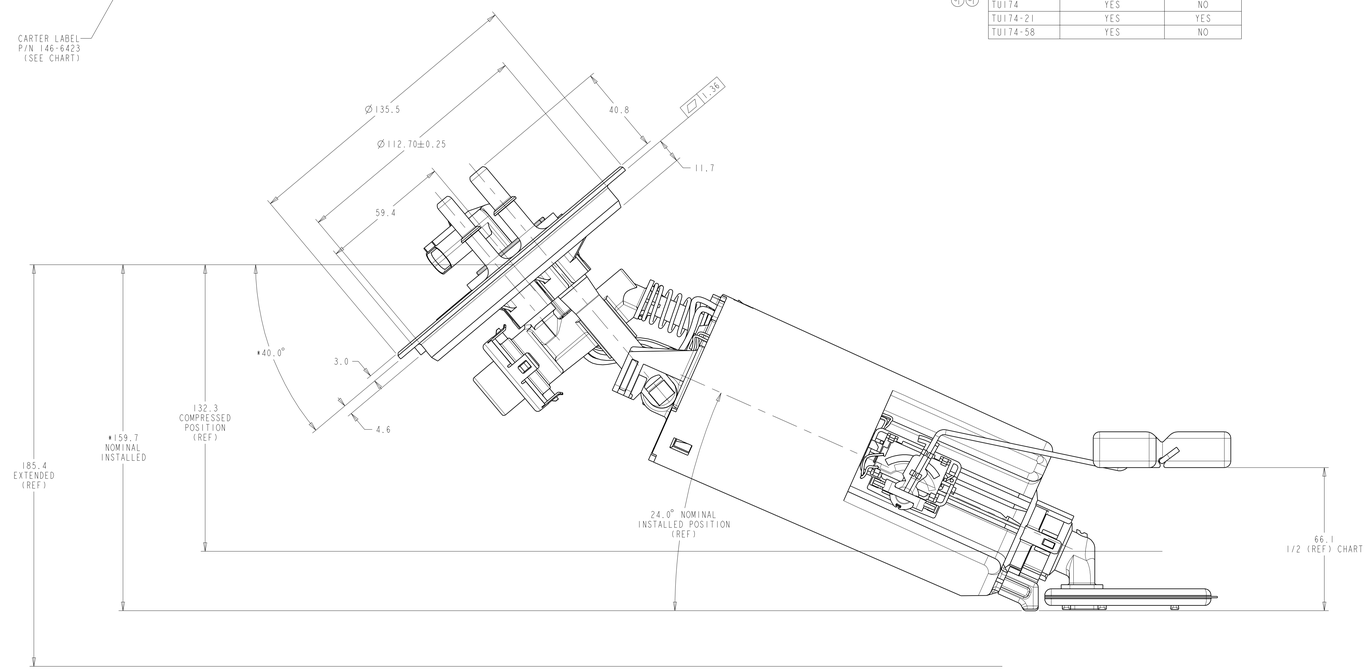

CHASSIS CONNECTOR WIRING	
LOCATION	FUNCTION
1	PUMP B+
2	SENSOR SIGNAL
3	NOT USED
4	PUMP AND SENSOR GROUND

NOTES:
1) REPLACES SERVICE MODULE P/N 04897431AB.

METRIC
ALL DIMENSIONS ARE IN MILLIMETERS

DO NOT SCALE
DECIMAL TOLERANCES UNLESS OTHERWISE SPECIFIED
ONE PLACE ±0.25 TWO PLACE ±0.13 ANGLES ±1°

THIRD ANGLE PROJECTION

DIMENSIONS IN ACCORDANCE WITH ASME Y14.5 - 2009

TI Automotive
630 COLUMBIA ST.
CARO, MI 48723
+1 989.673.7727

ENGINEER			MATERIAL/SPECIFICATION:
DES.MANAGER			
DESIGNER	TONY DASILVA	19MAY05	
CAD SYSTEM: PRO/E	SCALE: 1:1	SHEET NO. 1 OF 1	
REFERENCE ID/REV.: CAD DWG: AR0029107/AA		PLM REFERENCE/REV.: PRODUCT: 000104761/AA	
REFERENCE ID/REV.: CAD ASM: AR0029108/AA		PLM REFERENCE/REV.:	
DRAWING NAME: NS FFV AFTERMARKET			
SIZE: A0	DRAWING NO./REV.: TU174 / REV C		

TI AUTOMOTIVE CONFIDENTIAL AND PROPRIETARY:
THIS DRAWING IS THE EXCLUSIVE PROPERTY OF TI AUTOMOTIVE AND ALL PROPRIETARY RIGHTS IN THE SUBJECT MATTER THEREOF, INCLUDING BUT NOT LIMITED TO THE COPYRIGHT, PATENT AND ALL INTELLECTUAL PROPERTY RIGHTS. THE DRAWING IS PROVIDED FOR REFERENCE PURPOSES ONLY AND ON THE EXPRESS CONDITION THAT IT WILL BE HELD IN CONFIDENCE. THIS DRAWING SHALL NOT BE DISCLOSED TO OTHERS OR USED FOR THE PURPOSE OF MANUFACTURE OR PROCUREMENT FROM OTHERS WITHOUT THE PRIOR WRITTEN CONSENT OF TI AUTOMOTIVE. NO RIGHT OR LICENSE EXPRESS OR OTHER RIGHT IS GIVEN OR IMPLIED BY THE PROVISION OF THIS DRAWING TO RECIPIENT.
COPYRIGHT, TI AUTOMOTIVE 2010. ALL RIGHTS RESERVED.